SKS 1220F B6U 820 V16 SU

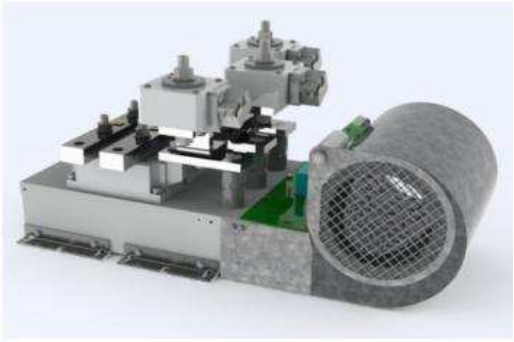

Diode Module stack

SEMISTACK® CLASSICS - B6U
Three phase uncontrolled rectifier

Preliminary Data

Ordering No. 08785117
Description SKS 1220F B6U 820 V16 SU

Features

- Isolated power stacks
- SKKD 701/16
- Heatsink P16/300
- Forced air cooling
- RC circuit included
- Fuses with microswitches
- Thermal trip included

Typical Applications

- Power supplies
- Rectifier for AC/DC motor control

Remarks

This technical information specifies semiconductor devices but promises no characteristics. No warranty or guarantee, expressed or implied, is made regarding delivery, performance or suitability.

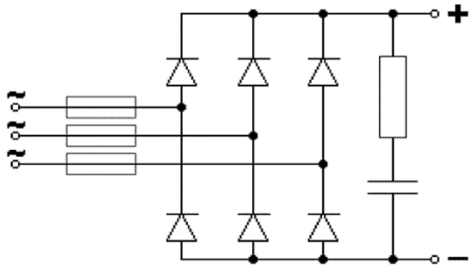

B6U

Electrical Characteristics						
Symbol	**Conditions**		**min**	**typ**	**max**	**Unit**
Electrical Data						
I_D	Maximum DC current	$T_{AMBIENT}$ = 35°C ; No overload		1 220		A
V_{AC}	Maximum AC voltage (+/-10%)			500		V_{AC}
V_{BUS}	DC Bus voltage			670		V_{DC}
P_{TOTAL}	Maximum stack power			820		kW
P_{LOSS}	Stack power loss ($T_{AMBIENT}$ = 35°C)					W

Environnmental Data					
Symbol	**Conditions**	**min**	**typ**	**max**	**Unit**
Mechanical Data					
Drawing	SEMIKRON document number.revision.version		**11091316.00**		-
Weight	Approximate total weight		25.2		kg
Altitude	Installation altitude without derating			1 000	m
Protection	IEC 60529		IP00		-
Pollution degree	EN 50178		2		-

Fan Data				
Type	SEMIKRON fan designation		**SKF 16A-230-11**	-
V_{FAN}	Fan voltage		230	V_{AC}
f_{FAN}	Fan frequency		50/60	Hz
I_{FAN}	Fan maximum input current		0.60/0.68	A
P_{FAN}	Fan power		135/154	W

Stack Protection					
Symbol	**Conditions**	**min**	**typ**	**max**	**Unit**
RC Circuit					
Type	RC in parallel with bridge rectifier		**1/6 RC SMPK 5**		-
R	Resistance (11W)		100		Ohm
C			0.22		µF

Fuses					
Size	1 fuse per phase, with microswitches		**33**		-
$I_{N\ RMS}$	Caliber		1 250		A
U_N	Nominal voltage (IEC)	690			V
I^2t	Total at Un at room temperature (approx. 20…25°C)			1942.5	kA^2s

Bimetal Thermal Trip				
T_S	Switching temperature over which thermal trip is open		110	°C
$I_{TC\ MAX}$	Maximum permissible current	at 240VAC	1	A
		at 30VDC	3	A

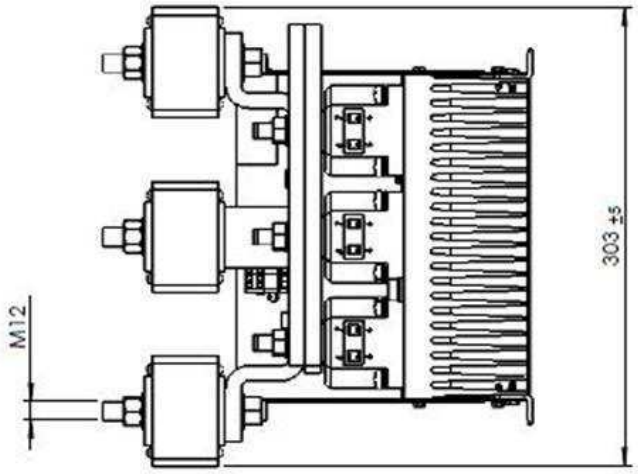

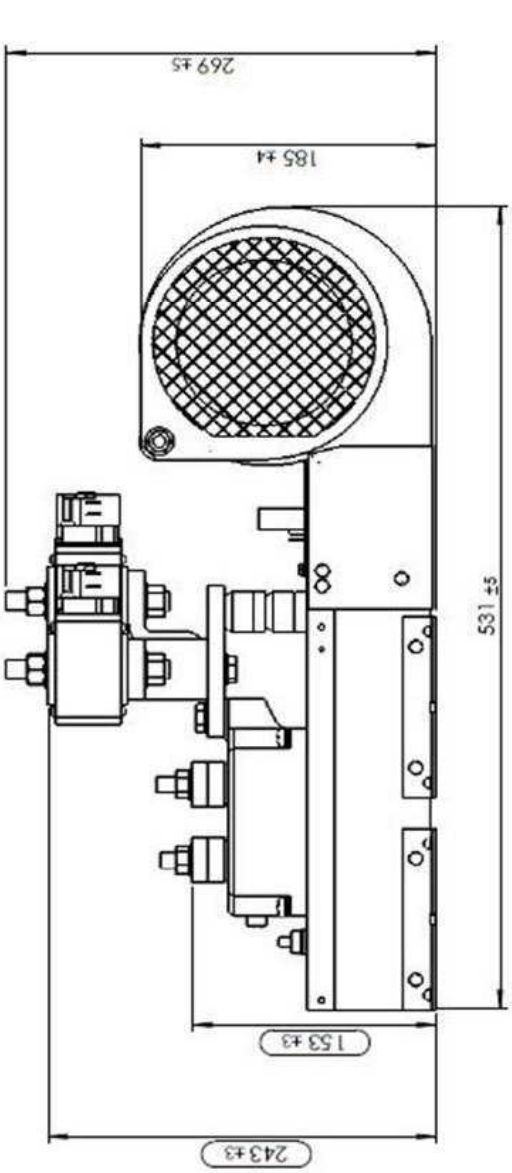

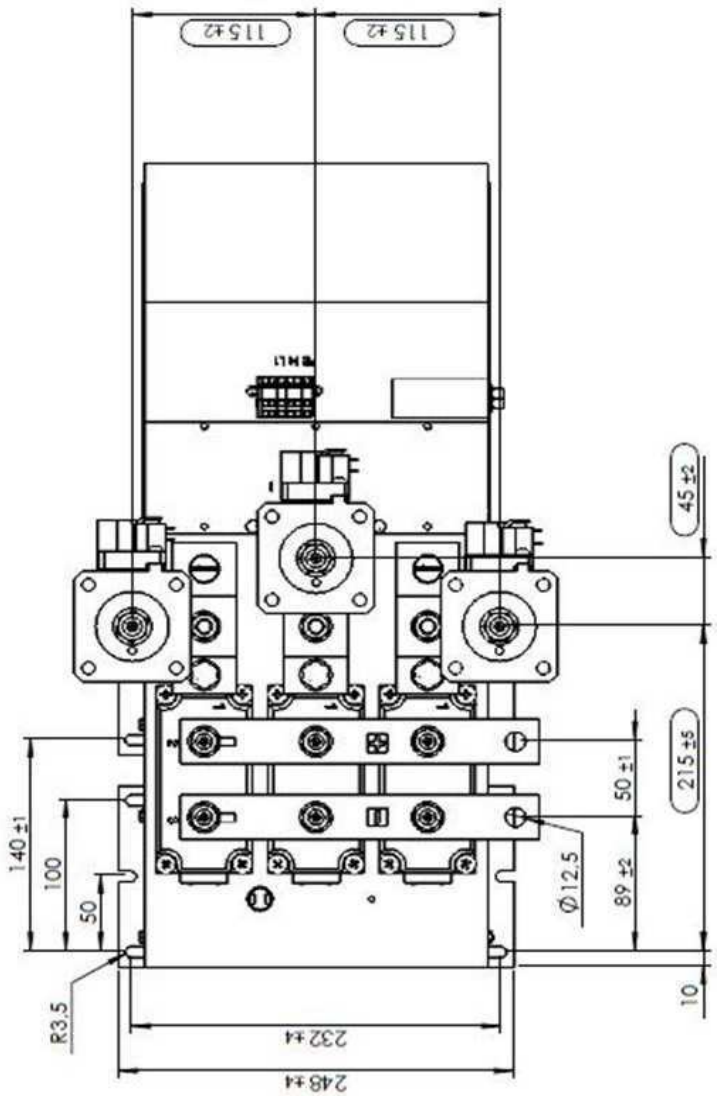

Dimensions

This technical information specifies semiconductor devices but promises no characteristics. No warranty or guarantee expressed or implied is made regarding delivery, performance or suitability.